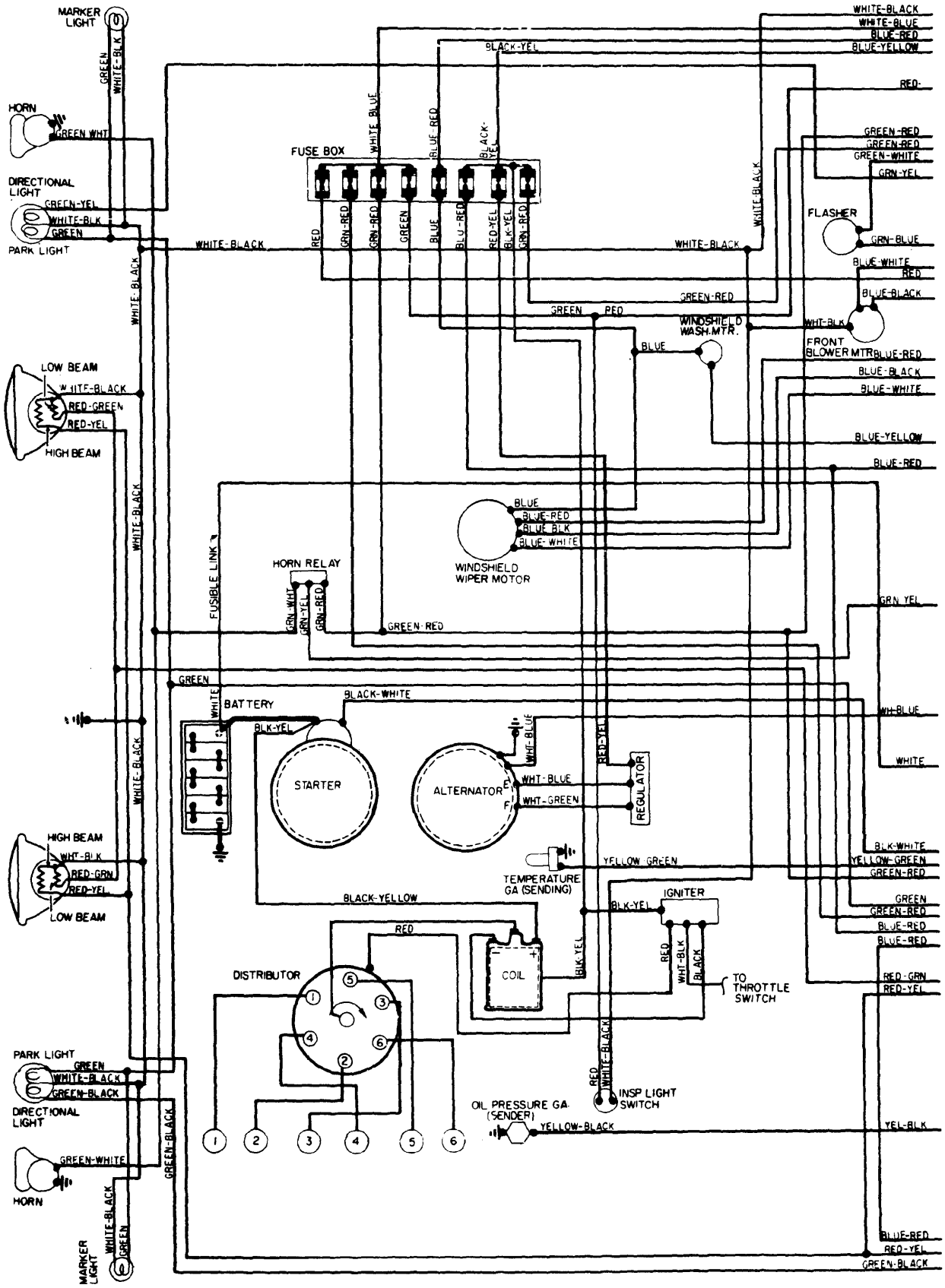
MARKER LIGHT
GREEN
WHITE-BLK
HORN
GREEN WHT
DIRECTIONAL LIGHT
GREEN-YEL
WHITE-BLK
GREEN
PARK LIGHT
FUSE BOX
WHITE BLUE
BLUE-RED
BLACK-YEL
RED
GRN-RED
GRN-RED
GREEN
BLUE
BLU-RED
RED-YEL
BLK-YEL
GRN-RED
WHITE-BLACK
WHITE-BLACK
WHITE-BLACK

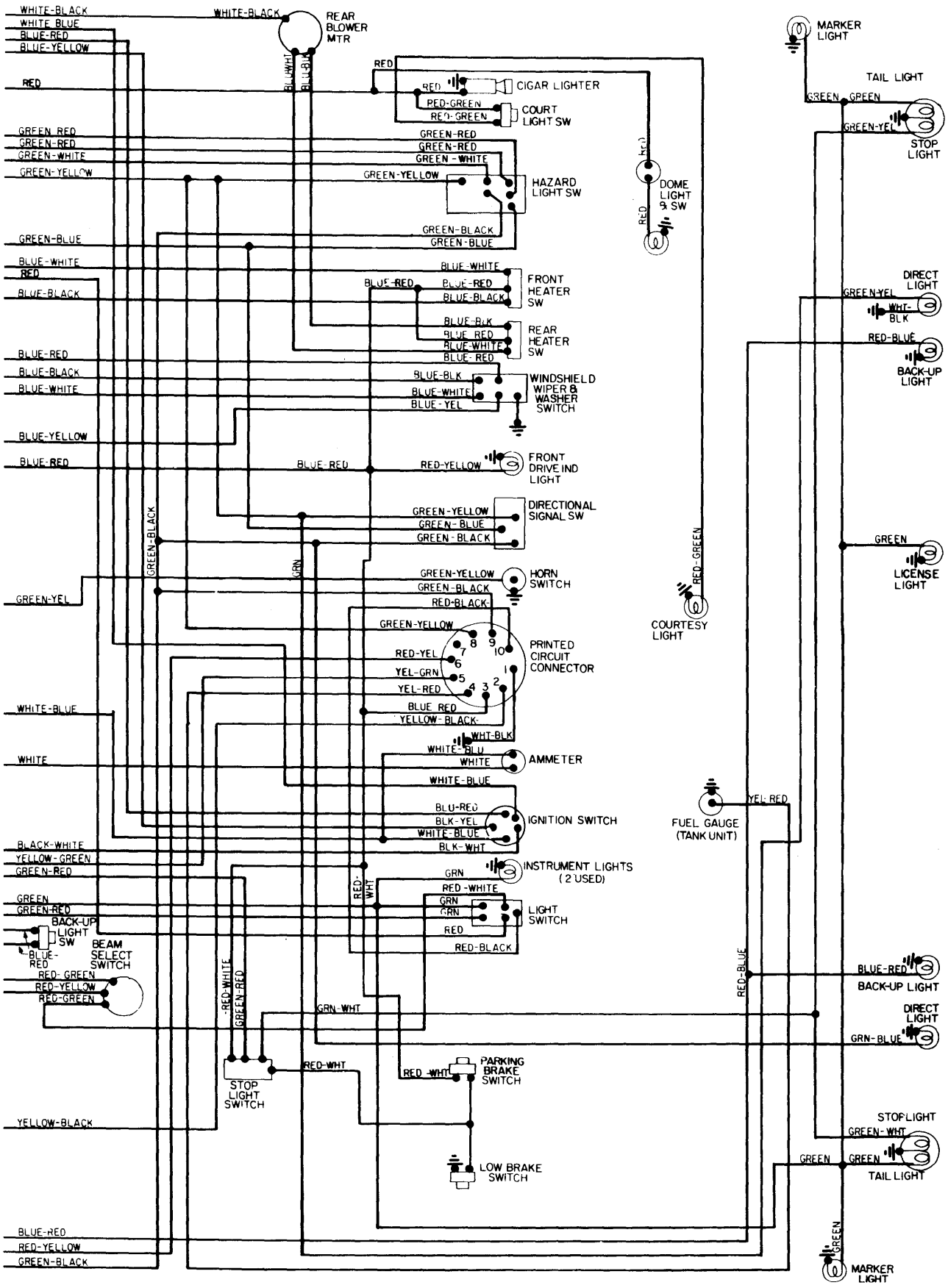
WHITE-BLACK
WHITE BLUE
BLUE-RED
BLUE-YELLOW
RED
GREEN RED
GREEN-RED
GREEN-WHITE
GREEN-YELLOW
GREEN-BLUE
BLUE-WHITE
RED
BLUE-BLACK
BLUE-RED
BLUE-BLACK
BLUE-WHITE
BLUE-YELLOW
BLUE-RED
GREEN-YEL
WHITE-BLUE
WHITE
BLACK-WHITE
YELLOW-GREEN
GREEN-RED
GREEN
GREEN-RED
BLUE-RED
RED-YELLOW
GREEN-BLACK
YELLOW-BLACK
REAR BLOWER MTR
BLU-WHT
BLU-BLK
CIGAR LIGHTER
RED-GREEN
COURT LIGHT SW
HAZARD LIGHT SW
DOME LIGHT & SW
FRONT HEATER SW
REAR HEATER SW
WINDSHIELD WIPER & WASHER SWITCH
FRONT DRIVE IND LIGHT
DIRECTIONAL SIGNAL SW
HORN SWITCH
COURTESY LIGHT
PRINTED CIRCUIT CONNECTOR
AMMETER
IGNITION SWITCH
FUEL GAUGE (TANK UNIT)
INSTRUMENT LIGHTS (2 USED)
LIGHT SWITCH
BACK-UP LIGHT SW
BEAM SELECT SWITCH
STOP LIGHT SWITCH
PARKING BRAKE SWITCH
LOW BRAKE SWITCH
MARKER LIGHT
TAIL LIGHT
STOP LIGHT
DIRECT LIGHT
BACK-UP LIGHT
LICENSE LIGHT
GREEN-BLACK
GRN
RED-WHT
RED-WHITE
GRN-WHT
RED-BLUE
YEL-RED
GRN-BLUE
GREEN-WHT
GREEN